ERF-ZB-WG173 WIRELESS ACCESS GATEWAY ZIGBEE

MODEL No: ERF-ZB-WG173



Product Specification

The wireless access gateway is the internal and external communication conversion equipment of the wireless temperature and vibration sensor. The internal communication adopts Zigbee wireless technology for data recovery and management. It can support 45 wireless temperature and vibration sensors, and the external communication adopts WIFI/4G/wired Ethernet.

Interface

- ERF-ZB-WG173 Wireless access gateway system application :
- Monitoring critical machinery and optimizing its reliability;
- Extend the service life of equipment;
- Provide maintenance decisions based on monitored data;
- Reduce equipment maintenance costs;
- Reduce the risk of unplanned downtime;

The system shall include a wireless access gateway for integration with the PA system complex. All miscellaneous wiring works required for proper system operation shall be included. Proper cable management practices shall be followed to ensure safety, accessibility, and ease of maintenance.
Installation in hazardous gas field areas shall comply with safety standards, and special precautions shall be taken to eliminate any risk.

ERF-ZB-WG173 WIRELESS ACCESS GATEWAY ZIGBEE

System Structure



Hardware Features

The Wireless access gateway hardware has the following features:

- The communication transmission scheme is diversified, and can use wired Ethernet, Wifi, 4G (full Netcom) and other methods to suit different industrial site conditions;
- Dual wireless perception architecture;
- One gateway can manage and interact with up to 45 wireless temperature and vibration sensors;
- A variety of power supply schemes are available;
- IP68 protection grade, explosion-proof explosion-proof certification (optional);
- Low power consumption design; Zero wiring, convenient construction and maintenance (external wireless communication);
- Dual processor architecture, edge computing and processing capabilities;
- Can communicate with PLC and DCS

The wireless communication distance not only changes with the complexity of the on-site environment, but also is closely related to the direction of the antenna and the type of the antenna. At present, the test is 300 meters in a visual barrier-free environment.

ERF-ZB-WG173 WIRELESS ACCESS GATEWAY ZIGBEE

Software Features

- Support black box function, disconnected network storage function;
- Device care assistant APP ;
- Support wireless temperature vibration sensor whitelist function;
- Automatic retransmission function;
- Intelligent diagnosis algorithm;

Harzardous Area Approvals

The wireless access gateway is flame-proof design, supporting hazardous locations in Zone 1. This certification is only available when explosion-proof products are selected.

- Zone 1 IIC gas environment ExdIICT4

Technical Specification

Module	Parameter	Specification
ZIGBEE Communication	Interface	N-type female
	Network topology	Star
	RF standard	IEEE 802.15.4
	Wireless frequency range	2.4 GHz ISM band
	Radio frequency power	16dbm (max)
	Wireless communication distance	300 Meter visual barrier-free distance (The actual distance depends on obstacles, the type and direction of the gateway antenna, the selection of the site location, etc.)
LORA communication (Optional)	Interface	N-type female
	Network topology	Star
	Wireless frequency range	470~510 MHZ
	Radio frequency power	22dbm (max)
	Wireless communication distance	1500 Meter visual barrier-free distance (The actual distance depends on obstacles, the type and direction of the gateway antenna, the selection of the site location, etc.)

ERF-ZB-WG173 WIRELESS ACCESS GATEWAY ZIGBEE

Technical Specification

Module	Parameter	Specification
WIFI communication	Interface	N-type female
	RF standard	IEEE 802.11 a/b/g/n/ac
	Wireless frequency range	2.400GHz~2.4835GHz 5.18GHz~5.845GHz
	RF output power (peak)	16dbm (max)
4G Communication	Interface	N-type female
	Supported frequency bands	LTE-FDD\LTE-TDD\WCDMA\TD-SCDMA\CDMA\GSM
	RF output power (peak)	33dbm (maximum peak GSM)
Ethernet	Interface	RJ45
	Communication standard	1000 Base-TX/100Base-TX
	Transmission rate	1000Mbps
	Transmission medium	Category 5 twisted pair
Mechanical parameters	Airframe material	Cast aluminium
	Anti-drop	1 meter drop to concrete
	Weight	1000 grams
	Dimensions	200mm × 150mm × 82mm
	IP rating	IP67 Waterproof and dustproof grade
Power Supply	AC (default)	AC220V
	DC (optional)	DC24V
	POE (optional for Ethernet version)	Power on Ethernet
Working conditions	Operating temperature	−40°C to 70°C
Storage capacity	non-volatile storage	8G bytes

ERF-ZB-WG173 WIRELESS ACCESS GATEWAY ZIGBEE

Dimension and parameters

Unit in mm

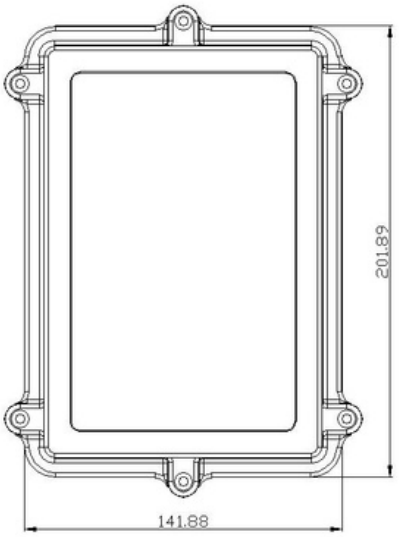

Appendix

The wireless smart gateway can only be used when matched with the following accessories. These accessories can be purchased as a set, or can be ordered or downloaded separately, which is selected by the customer.

Serial Number	Name	Reference
1	ZIGBEE Antenna	
2	2.4G/5.8G gain 4db dual-band omnidirectional fiberglass antenna	
3	Mounting Bracket (Wall mounting method)	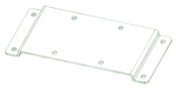
4	Equipment care assistant, this APP is used with mobile phones to complete gateway configuration, sensor information reading, temporary collection, signal detection, etc.	—
5	Wireless monitoring system quick use guide, this document describes how to quickly establish a connection and complete the acquisition	—
6	Wireless monitoring system hardware manual, how to use the hardware, installation, etc.	—